A Fully-Integrated $780 \times 800 \mu m^2$ Multi-Digital Silicon Photomultiplier With Column-parallel Time-to-Digital Converter

Shingo Mandai, Vishwas Jain, and Edoardo Charbon

Faculty of Electrical Engineering, TU Delft
Mekelweg 4, 2628 CD Delft, The Netherlands
Email: s.mandai@tudelft.nl

***Abstract*— This paper presents a digital silicon photomultiplier based on column-parallel time-to-digital converter (TDC), so as to improve the time resolution of single-photon detection. By reducing the number of pixels per TDC, the pixel-to-pixel skew is reduced. We achieved 264 ps FWHM time resolution of single-photon detection using a 48-fold column-parallel TDC with a temporal resolution of 51.8ps (LSB), fully integrated in standard CMOS technology. The potential for multi-photon detection is discussed in the paper with a 48-column-parallel TDC configuration.**

I. Introduction

Photomultiplier tubes (PMTs) are widely used for cancer diagnosis, scientific research and industrial measurement, such as spectrophotometers, Positron Emission Tomography (PET) or Fluorescence-lifetime imaging microscopy (FLIM).

A Silicon photomultiplier (SiPM) is an alternative to PMTs in the detection of highly localized (in time and space) bursts of visible photons associated with a physical phenomenon, such as a high-energy photon release. SiPMs are often preferred because of their tolerance to magnetic fields, compactness, and low bias voltage [1]–[7]. At least two flavors exist for SiPMs: analog and digital. An analog SiPM (A-SiPM) consists of an array of avalanche photodiodes operating in Geiger mode, whose avalanche currents are summed in one node as shown in Fig. 1 (a) [1]–[6]. The resulting current is proportional to the number of detected photons, thus providing single- and multiple-photon detection capability. In a digital SiPM (D-SiPM), each photo-detecting cell consists of a single-photon avalanche diode (SPAD) and circuit elements, individually controlled to optimize overall dark counts and temporal response [7]. In addition, the output signal is a high-speed digital signal because all SPAD outputs are connected to one OR circuit through digital driver to detect time information sharply as shown in Fig. 1 (b). In most D-SiPMs, the global output is directly routed to an on-chip time-to-digital converter (TDC) to reduce external components and temporal noise. Though, the time uncertainty for single-photon detection is limited by SPAD jitter and TDC non-linearities, as well as systematic skews due to imperfectly balanced routing. A-SiPMs are especially sensitive to these systematic skews, while in D-SiPMs they can be largely removed or compensated for. Alternatively, the approach pursued in [8] can achieve balanced routing by implementing a on-pixel TDC as shown in Fig. 1 (c). Furthermore, the statistical approach to estimate time of arrival is possible for multiple-photon detection, such as scintillation from a scintillator. However, the fill factor is low due to the use of a TDC per pixel..

Sharing several detector cells with one TDC has the advantage of increasing the fill factor while still enabling independent photon time-of-arrival evaluation, as shown in Fig. 1 (d). The skew problem is also improved when compared to conventional D-SiPMs for single-photon detection, and the multiple-time information can be utilized in a statistical approach for multiple-photon detection [9] [10].

In this paper, we present a multi-digital SiPM (MD-SiPM) with an array of 48 TDCs, each with a temporal resolution of 51.8ps (LSB). This arrangement, known as column-parallel TDC, not only reduces the number of detector cells per TDC but also enables the characterization of the burst in terms of the first 48 photons impinging on the SiPM. Each TDC is shared by 12 SPADs in the SiPM. We focus on the measurements of time resolution of the MD-SiPM. The overall temporal accuracy for single-photon detection is 264 ps (FWHM), when the photon source exhibits 34 ps (FWHM) jitter. Both fine time resolution and high fill factor are achieved.

II. Multi-Digital SiPM architecture

Figure 2 (a) shows the block diagram of the MD-SiPM; it consists of an array of 16×26 photo-detecting cells (called pixels hereafter), a 48-fold column-parallel TDC, pre-charge circuits, a row decoder, a mask register, and an energy register. The size of the MD-SiPM is 780 μm×800 μm. The pixel size is 30 μm×50 μm with a 21.2 % fill factor. The size of one TDC is 16 μm×800 μm, including the TDC data readout circuit, which is smaller than the already published column-parallel TDC [11]. In our column, three TDCs are implemented to reduce the number of pixels per TDC in an interlaced configuration. A mask register is used for disabling those pixels with dark count rate (DCR) exceeding a threshold, so as to minimize spurious TDC activation. The energy register is used for reading out the

978-1-4673-2213-3/12/$31.00 ©2012 IEEE

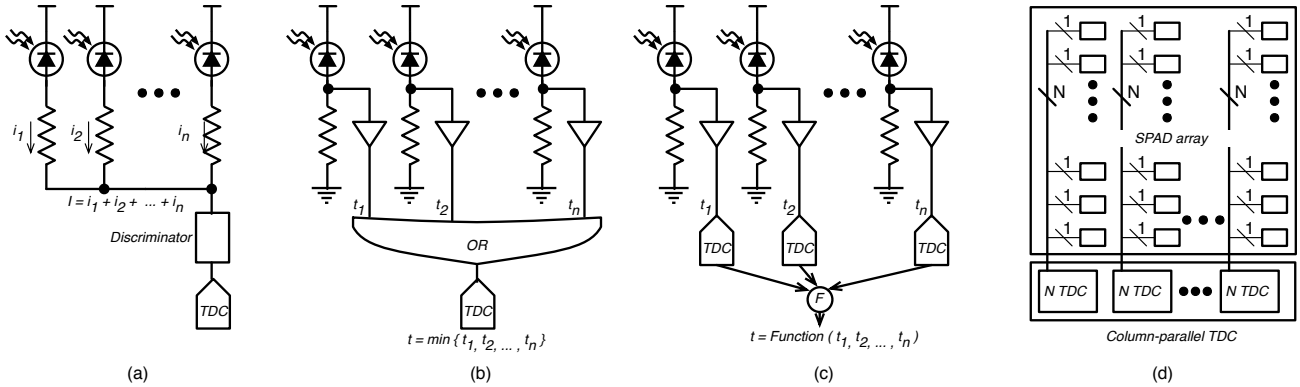

Fig. 1. The concept of (a) Analog SiPM, (b) conventional Digital SiPM, (c) ideal digital SiPM and (d) proposed Multi-Digital SiPM

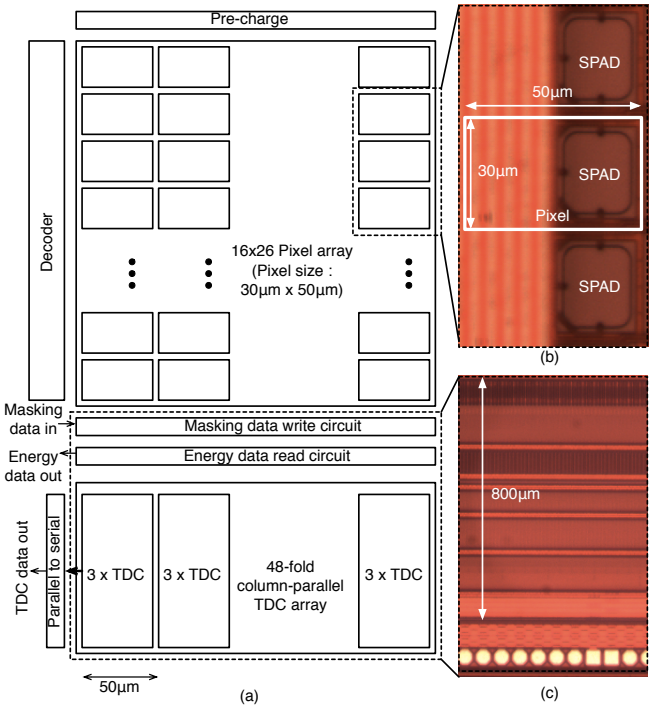

Fig. 2. (a) Sensor block diagram. (b) Detail of SiPM photo-detector cells. (c) Column-parallel TDC micro-photograph.

number of pixels that detected at least a photon on average. Figure 2 (b) and (c) show the microphotograph of MD-SiPM.

III. Circuit Design

A. Pixel configuration

Figure 3 (a) shows the schematic of a pixel circuit. The pixel comprises the SPAD [12], active recharge circuitry to reduce dead time, a 2-bit counter, a memory, and a masking circuit. When the photons are detected from e.g. a scintillator, the first photon generates a pulse that controls via a pull-down the TDC input line. When the active recharge circuitry is on, the dead time of a SPAD is controlled by DBIAS from 2.5 ns to infinity, and the 2-bit counter counts how many photons or dark counts impinge the SPAD. In total, this MD-SiPM can count 1248 SPAD firings, which is 3 times higher than the number of pixels. The output of the 2-bit counter is saved to the 2-bit memory, and read out during the next frame. ROWCALSEL is always on except during calibration for DCR reduction. Calibration of DCR is carried out in advance to check which SPADs should be masked. The making circuit disables the SPAD when DCR is above a given threshold according to the DCR calibration.

B. TDC configuration

Figure 3 (b) shows the TDC schematic. The TDC comprises a coarse and a fine conversion. CLK is supplied from outside the chip and a 10-bit coarse counter counts the clock cycles after a new frame starts. Until STOP becomes high (SPAD firing in this case), the coarse counter keeps counting based on CLK. The coarse counter stops counting when STOP become high, and the synchronizer generates a pulse according to the time residue between CLK and STOP. The pulse corresponding to the time residue of the coarse TDC, EN, activates the fine TDC and start oscillation by a 4-stage inverter. During the pulse, the 6-bit fine counter counts how many cycles the oscillation is completing and the phase detector detects the phase when the oscillation stops. The phase detector employs an interpolation technique to double the phase resolution. Conventionally, the phase detector looks at only PH<0> and PHB<0>, PH<1> and PHB<1>, PH<2> and PHB<2>, and PH<3> and PHB<3> in the Fine TDC of Fig. 3 (b). By expanding the comparison to PH<0> and PHB<3>, PH<0> and PHB<1>, PH<1> and PHB<2>, and PH<2> and PHB<3>, the interpolated phase is detectable as shown in Phase interpolation of Fig. 3 (b). The extra circuit elements are only four comparators and memory. Finally, the coarse TDC data and the fine TDC data are summed up to calculate the final TDC data.

IV. Measurement Results

A. TDC characterization

We have designed and fabricated the MD-SiPM using a 0.35 μm high voltage CMOS process. The power supply

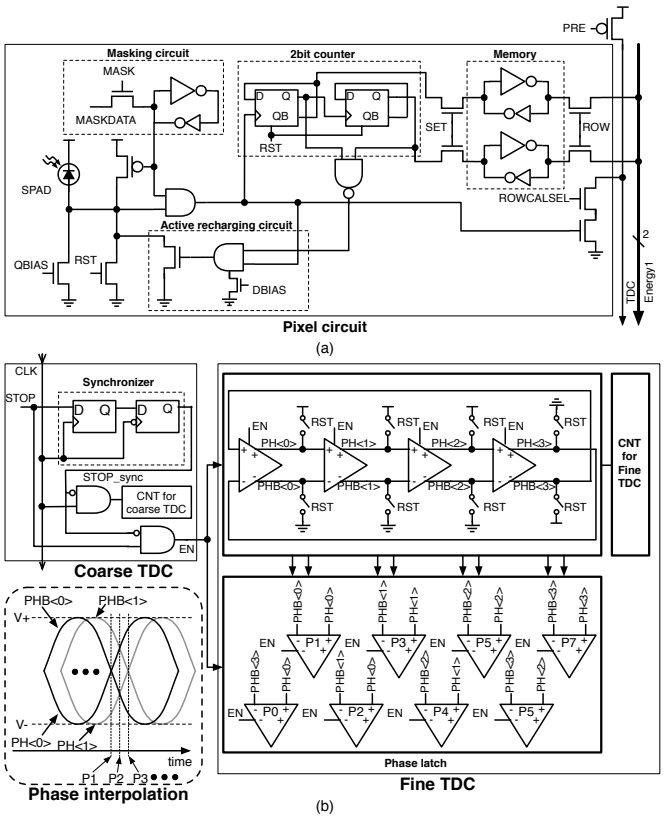

Fig. 3. (a) Schematic of pixel circuit. (b) Structure of TDC

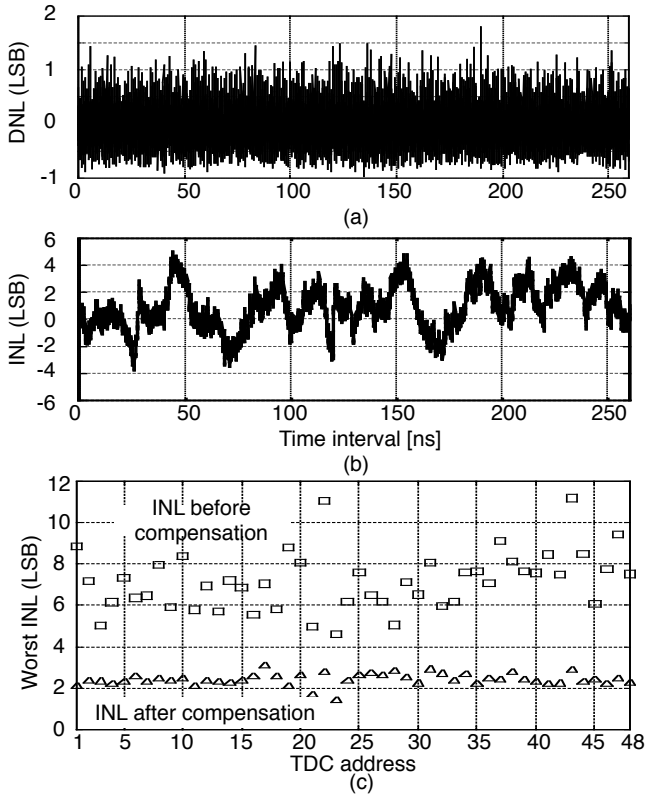

Fig. 4. A TDC measurement results of (a) DNL and (b) INL. (c) INL variation in 48 TDCs before INL compensation and after compensation

voltage is 3.3 V. The TDCs are characterized by the density test using SPADs at room temperature. Figure 4 (a) and (b) show the DNL and INL measurement results of one particular TDC at the 260 ns input range, respectively. The LSB is 51.8 ps and the average of the worst DNL and INL in 48 TDCs are 1.97 LSB and 7.18 LSB, respectively. However INL can be compensated to 2.39 LSB about the average of the worst INL.The worst INL variation of 48 TDCs before INL compensation and after INL compensation are shown in Fig. 4 (c).

B. Single photon detection

The timing resolution for a single photon consists of mainly laser jitter, TDC intrinsic jitter, SPAD jitter, and skew. Figure 5 (a) shows the TDC intrinsic jitter of 93.2 ps, which is measured using an external STOP. Figure 5 (b) shows a measurement of time resolution of MD-SiPM for a single photon. The FWHM time resolution is 264 ps including the SPAD jitter, TDC intrinsic jitter and the skew for TDC input lines when the photon source exhibits 34 ps (FWHM) jitter at 3V excess bias. Figure 5 (c) shows the FWHM time resolution in each excess bias. The time resolution improves by increasing excess bias for SPADs, because the SPAD jitter dramatically decreases when the excess bias is high. Table I summarizes the performance of our detector in comparison with other SiPMs found in the literature. We obtained a lower temporal uncertainty for single-photon detection than previously reported digital SiPMs [7], while achieving a relatively high fill factor of 21.2%, a significant improvement with respect to [8], [12].

TABLE I

PERFORMANCE SUMMARY AND COMPARISON

Parameter	Our work	[1]	[7]	[12]	[8]
Tech.	multi digital	analog	digital	digital	digital
Area(mm^2)	0.8x0.78	1x1	3.8x3.3	3.2x3.2	8x6.4
Fill factor(%)	21.2	30-78	50	6	1
Time res.(ps)	264	200-300	>350*	-	-

* The data is calculated with their equation in the paper [7]

C. Extension for multiple-photon detection

The use of SiPMs in time-of-flight PET applications has led to intensive research activity in an attempt to analyze the time information yielded by D-SiPMs [11], [12]. [9], [10]. Especially, [10] shows the time resolution improvement of the detector by using multiple-photon time information using a statistical approach. To evaluate the feasibility of this approach with the MD-SiPM, a simulation is carried out supposing that up to 50 photons impinge on the entire detector with a Poissonian arrival statistics. The simulation considers several numbers of TDCs, such as 96 and 192. The simulation result is shown in Fig. 6. Figure 6 (a) shows the relation between the orders of projected photons and the number of photon acquired in the detector in each number of TDCs. This chip

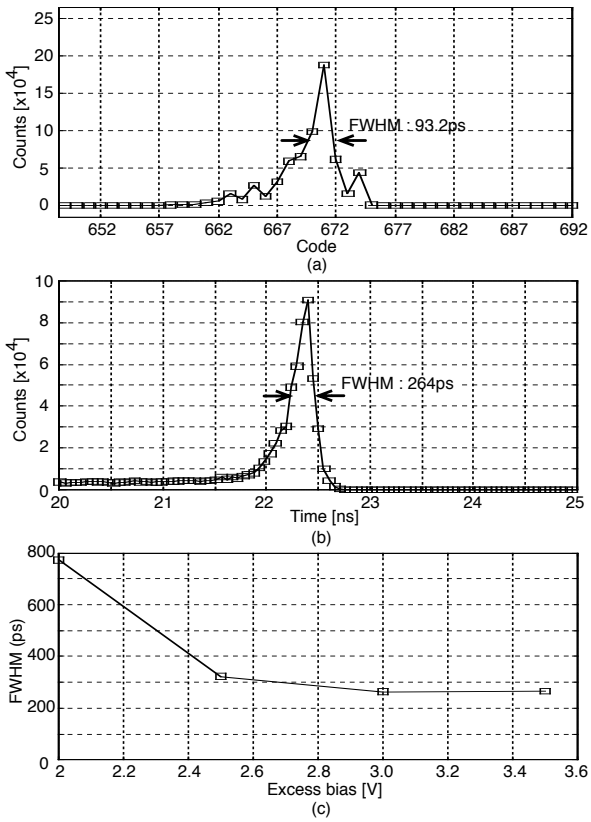

Fig. 5. (a) Measurement results of time resolution for a single photon. (b) TDC intrinsic jitter. (c) Time resolution changes by excess bias

has 48 TDCs, but one can clearly see the improvement of acquisition rate and close to the ideal behavior when one uses more TDCs. Figure 6 (b) shows simulation results of the probability of detecting the time information of photons continuously. The simulation suggests the possibility to get multiple time information without any detection interruption.

V. Conclusion[1]

We have proposed a new type of SiPM, denominated multi-digital silicon photomultiplier (MD-SiPM) based on column-parallel time-to-digital converters (TDCs), so as to not only improve the time resolution of single-photon detection but to realize a statistical approach to multiple-photon detection. By reducing the number of pixels per TDC, the pixel-to-pixel skew is reduced. We achieved 264 ps FWHM time resolution of single-photon detection using a 48-fold column-parallel TDC with a temporal resolution of 51.8ps (LSB), fully integrated in standard CMOS technology.

References

[1] MPPC, http://jp.hamamatsu.com.

[2] P. Buzhan, B. Dolgoshein, L. Filatov, A. Ilyin, V. Kantzerov, V. Kaplin, A. Karakash, F. Kayumov, S. Klemin, E. Popova, and S. Smirnov, "Silicon photomultiplier and its possible application," *Nucl. Instrum. Methods Phys. Res. A*, vol. 504, no. 1-3, pp. 48–52, 2003.

[3] A. G. Stewart, V. Saveliev, S. J. Bellis, D. J. Herbert, P. J. Hughes, and J. C. Jackson, "Performance of 1-mm^2 silicon phopomultiplier," *IEEE J. Quantum Electron.*, vol. 44, no. 2, pp. 157–164, Feb. 2008.

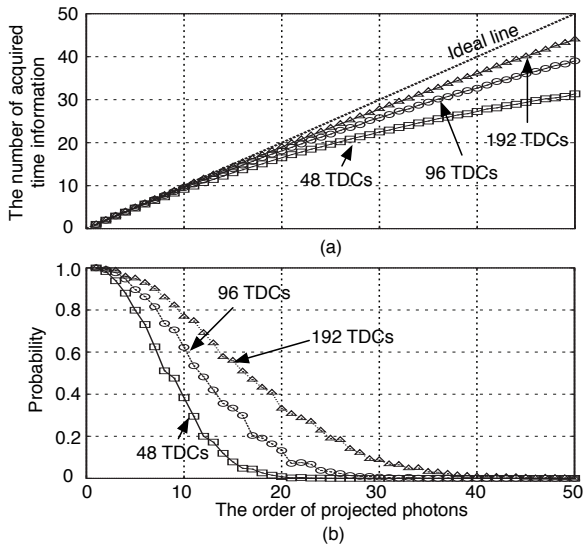

Fig. 6. Simulation results of MD-SiPM : (a) the relation between the orders of projected photons and the number of photon acquired by MD-SiPM, and (b) the probability to be able to detect the time information of photons continuously without skipped data, with 48 TDCs (This work), extrapolating to 96 TDCs, and 192 TDCs.

[4] N. Zorzi, M. Melchiorri, A. Piazza, C. Piemonte, and A. Tarolli, "Development of large-area silicon photomultiplier detectors for PET applications at FBK," *Nucl. Instrum. Methods Phys. Res. A*, vol. 636, no. 1, pp. 208–213, 2010.

[5] M. Mazzillo, G. Condorelli, D. Sanfilippo, G. Valvo, B. Carbone, A. Piana, G. Fallica, A. Ronzhin, M. Demarteau, S. Los, and E. Ramberg, "Timing performances of large area silicon photomultipliers fabricated at STMicroelectronics," *IEEE Trans. Nucl. Sci.*, vol. 57, no. 4, pp. 2273–2279, Aug. 2010.

[6] M. McClish, P. Dokhale, J. Christian, C. Stapels, E. Johnson, R. Robertson, and K. S. Shah, "Performance measurements of CMOS position sensitive solid-state photomultipliers," *IEEE Trans. Nucl. Sci.*, vol. 57, no. 4, pp. 2280–2286, Aug. 2010.

[7] T. Frach, G. Prescher, C. Degenhardt, R. Gruyter, A. Schmitz, and R. Ballizany, "The digital silicon photomultiplier principle of operation and intrinsic detector performance," in *Proc. IEEE Nuclear Science Symp. Conf.*, 2009, pp. 1959–1965.

[8] C. Veerappan, J. Richardson, R. Walker, D. U. Li, M. Fishburn, Y. Maruyama, D. Stoppa, F. Borghetti, M. Gersbach, R. K. Henderson, and E. Charbon, "A 160 × 128 single-photon image sensor with on-pixel 55 ps 10b time-to-digital converter," in *IEEE ISSCC Dig. Tech. Papers*, 2011, pp. 312–314.

[9] M. W. Fishburn and E. Charbon, "System trade-offs in gamma-ray detection utilizing SPAD arrays and scintillators," *IEEE Trans. Nucl. Sci.*, vol. 57, no. 5, pp. 2549–2557, Oct. 2010.

[10] S. Seifert, H. T. van Dam, and D. R. Schaart, "The lower bound on the timing resolution of scintillation detectors," *Phys. Med. Biol.*, no. 57, pp. 1797–1814, 2012.

[11] S. Mandai and E. Charbon, "A 128-channel, 9ps column-parallel two-stage TDC based on time difference amplification for time-resolved imaging," in *Proc. IEEE ESSCIRC*, 2011, pp. 119–122.

[12] C. Niclass, C. Favi, T. Kluter, M. A. Gersbach, and E. Charbon, "A 128 × 128 single-photon image sensor with column-level 10-bit time-to-digital converter array," *IEEE J. Solid-State Circuits*, vol. 43, no. 12, pp. 2977–2989, Dec. 2008.

[1]The research leading to these results has received funding from the European Union Seventh Framework Programme under Grant Agreement n°256984 (EndoTOFPET-US). The authors would like to thank Dr. Yuki Maruyama, Matthew Fishburn, Chockalingam Veerappan of TU Delft and Pierre Jarron of CERN. The authors are also grateful to Xilinx, Inc. for FPGA donations.